Work Order ID 68432

Wednesday, April 13, 2011 11:05:26 AM

Item ID: D412-630-033 **Accept** **Setup Start**

Revision ID: **Stop**

Item Name: Heli Access Step LH Folding

Start Date: 4/13/2011 **Start Qty:** 3.00 **Cust Item ID:**

Required Date: 4/29/2011 **Req'd Qty:** 3.00 **Customer:**

Reference:

Approvals: **Process Plan:** _____ **Date:** _____ **Tooling:** _____ **Date:** _____ **Run Start**

QC: _____ **Date:** _____ **SPC (Y/N):** _____ **Date:** _____ **Stop**

Sequence ID/ Work Center ID	Operation Description	Set Up/ Run Hours	Tool ID	Tool #	Plan Code	Accept Qty	Reject Qty	Reject Number	Insp. Stamp

Draw Nbr	Revision Nbr
IIN D412-630	Rev M

100 — 0.00

DC — DOCUMENT CONTROL

Document Control

Memo — 0.00

Photocopy bluefile & create labels per PPP D412-630-033 CHG003 S 11/04/28

OK for BG 11/04/28

110 — 0.00

Small Fab — Small Fab

Small Fab

Memo — 0.00

Assemble as per dwg D412-630 p.14
Coat all hardware with LPS3 rust inhibitor
A/R LPS3 batch: M107929
COAT exposed HARDWARE WITH ~~LPS PR~~OCYON
A/R LPS PROCYON BATCH: M114596

11/04/28 (3)

Dart Aerospace Ltd

W/O:		WORK ORDER CHANGES					
DATE	STEP	PROCEDURE CHANGE	By	Date	Qty	Approval Chief Eng / Prod Mgr	Approval QC Inspector

Part No: _____ **PAR #:** _____ **Fault Category:** _____ **NCR:** Yes No **DQA:** _____ **Date:** _____

Resolution: _____ **Disposition:** _____ **QA: N/C Closed:** _____ **Date:** _____

NCR:		WORK ORDER NON-CONFORMANCE (NCR)						
DATE	STEP	Description of NC Section A	Corrective Action Section B			Verification Section C	Approval Chief Eng	Approval QC Inspector
			Initial Chief Eng	Action Description Chief Eng	Sign & Date			

NOTE: Date & initial all entries

H:\fFORMS\Quality Assurance\approved QA\NCRWO RevE

Work Order ID 68432

Wednesday, April 13, 2011 11:05:26 AM

Item ID: D412-630-033 **Accept** **Setup Start** **Stop**

Revision ID:

Item Name: Heli Access Step LH Folding

Start Date: 4/13/2011 **Start Qty:** 3.00 **Cust Item ID:**

Required Date: 4/29/2011 **Req'd Qty:** 3.00 **Customer:**

Reference:

Run Start **Stop**

Approvals: **Process Plan:** _____ **Date:** _____ **Tooling:** _____ **Date:** _____

QC: _____ **Date:** _____ **SPC (Y/N):** _____ **Date:** _____

Sequence ID/ Work Center ID	Operation Description	Set Up/ Run Hours	Tool ID	Tool #	Plan Code	Accept Qty	Reject Qty	Reject Number	Insp. Stamp
120	QC5- Inspect part completeness to step on W/O	0.00				x3			
QC	Memo	0.00				44			
Quality Control									
130	Pick Kit	0.00							
Packaging	Memo	0.00							
Packaging									
140	QC4- 100% Inspect kits for completeness	0.00							
QC	Memo	0.00				x3 44			
Quality Control									

Dart Aerospace Ltd

W/O:		WORK ORDER CHANGES					
DATE	STEP	PROCEDURE CHANGE	By	Date	Qty	Approval Chief Eng / Prod Mgr	Approval QC Inspector

Part No: _____ **PAR #:** _____ **Fault Category:** _____ **NCR:** Yes No **DQA:** _____ **Date:** _____

Resolution: _____ **Disposition:** _____ **QA: N/C Closed:** _____ **Date:** _____

NCR:		WORK ORDER NON-CONFORMANCE (NCR)						
DATE	STEP	Description of NC Section A	Corrective Action Section B			Verification Section C	Approval Chief Eng	Approval QC Inspector
			Initial Chief Eng	Action Description Chief Eng	Sign & Date			

NOTE: Date & initial all entries

H:\fFORMS\Quality Assurance\approved QA\NCRWO RevE

Work Order ID 68432

Wednesday, April 13, 2011 11:05:26 AM

Item ID: D412-630-033 **Accept** **Setup Start** **Stop**

Revision ID:

Item Name: Heli Access Step LH Folding

Start Date: 4/13/2011 **Start Qty:** 3.00 **Cust Item ID:**

Required Date: 4/29/2011 **Req'd Qty:** 3.00 **Customer:**

Reference:

Run Start **Stop**

Approvals: **Process Plan:** _____ **Date:** _____ **Tooling:** _____ **Date:** _____

QC: _____ **Date:** _____ **SPC (Y/N):** _____ **Date:** _____

Sequence ID/ Work Center ID	Operation Description	Set Up/ Run Hours	Tool ID	Tool #	Plan Code	Accept Qty	Reject Qty	Reject Number	Insp. Stamp
150	Packaging	0.00							
Packaging						11/4/29	SL		BD
Packaging	**Memo**	0.00							
Packaging	Identify and pack for shipping as per PPP D412-630-033 Location: 119 PPP Rev: A								
160	QC21- Final Inspection - Work Order Release	0.00							
QC						CL	11/04/29		
Quality Control	**Memo**	0.00							

MF
11-04-29

Dart Aerospace Ltd

W/O:		WORK ORDER CHANGES					
DATE	STEP	PROCEDURE CHANGE	By	Date	Qty	Approval Chief Eng / Prod Mgr	Approval QC Inspector

Part No: _____ **PAR #:** _____ **Fault Category:** _____ **NCR:** Yes No **DQA:** _____ **Date:** _____

Resolution: _____ **Disposition:** _____ **QA: N/C Closed:** _____ **Date:** _____

NCR:		WORK ORDER NON-CONFORMANCE (NCR)						
DATE	STEP	Description of NC Section A	Corrective Action Section B			Verification Section C	Approval Chief Eng	Approval QC Inspector
			Initial Chief Eng	Action Description Chief Eng	Sign & Date			

NOTE: Date & initial all entries

Picklist Print

9

Wednesday, April 13, 2011 11:05:21 AM

Work Order ID: 68432

Parent Item: D412-630-033

Parent Item Name: Heli Access Step LH Folding

Start Date: 4/13/2011 **Required Date:** 4/29/2011

Start Qty: 3.00 **Required Qty:** 3.00

Comments:
IPP Rev:A New Issue 06-11-08 JLM
IPP rev B ecn 1019, added d2807-041 EC verified by:DD
IPP rev :C 11.01.06 added route seq ID DD vef:EC

Component Item ID/ Item Name	Replacement Item ID	Mfg/ Purch	Bin Item	Primary Location	Last Location	Route Seq ID	Unit of Measure	Qty on Hand	Qty per Kit	Total Qty	Qty Issued	Date Issued	Status
D2012-107 Clevis		Manufactured	No			110	Each	43.0000	1	3	11/04/26		
				Location			**Loc Qty**		**Loc Code**				
				WA005			43						
					62242		3						
					66811		40			3			
D2803-041 Bracket Assembly		Manufactured	No			110	Each	9.0000	1	3	11/04/26		
				Location			**Loc Qty**		**Loc Code**				
				ST149			9						
					61724		3						
					64092		6			3			
D2804-041 Bracket Assembly		Manufactured	No			110	Each	9.0000	1	3	11/04/26		
				Location			**Loc Qty**		**Loc Code**				
				ST150			9						
					46843		1			1			
					61726		4						
					62075		4			2			

Dart Aerospace Ltd

W/O:		WORK ORDER CHANGES					
DATE	STEP	PROCEDURE CHANGE	By	Date	Qty	Approval Chief Eng / Prod Mgr	Approval QC Inspector

Part No: _____ **PAR #:** _____ **Fault Category:** _____ **NCR:** Yes No **DQA:** _____ **Date:** _____

Resolution: _____ **Disposition:** _____ **QA: N/C Closed:** _____ **Date:** _____

NCR:		WORK ORDER NON-CONFORMANCE (NCR)						
DATE	STEP	Description of NC Section A	Corrective Action Section B			Verification Section C	Approval Chief Eng	Approval QC Inspector
			Initial Chief Eng	Action Description Chief Eng	Sign & Date			

NOTE: Date & initial all entries

Picklist Print

Wednesday, April 13, 2011 11:05:21 AM

9

Work Order ID: 68432

Parent Item: D412-630-033

Parent Item Name: Heli Access Step LH Folding

Start Date: 4/13/2011 **Required Date:** 4/29/2011

Start Qty: 3.00 **Required Qty:** 3.00

D2807-041	Manufactured	No	110	Each	27.0000	2	6	11/04/26
Door prop								

Location	Loc Qty	Loc Code	
ST022	27		
60540	2		
61891	3		3
65324	8		3
66336	14		

D2813	Manufactured	No	110	Each	25.0000	2	6	11/04/26
Washer								

Location	Loc Qty	Loc Code	
ST023	25		
61051	25		6

D3562-041	Manufactured	No	110	Each	1.0000	1	3	11/04/29
Step Assembly, LH								B68431 (3x)

Location	Loc Qty	Loc Code	
FG110	1		
54963	1		

D3395-1	Manufactured	No	110	Each	16.0000	4	12	11/04/26
Bushing								

Location	Loc Qty	Loc Code	
ST052	16		
60861	16		12

Dart Aerospace Ltd

W/O:		WORK ORDER CHANGES					
DATE	STEP	PROCEDURE CHANGE	By	Date	Qty	Approval Chief Eng / Prod Mgr	Approval QC Inspector

Part No: _____ **PAR #:** _____ **Fault Category:** _____ **NCR:** Yes No **DQA:** _____ **Date:** _____

Resolution: _____ **Disposition:** _____ **QA: N/C Closed:** _____ **Date:** _____

NCR:		WORK ORDER NON-CONFORMANCE (NCR)						
DATE	STEP	Description of NC Section A	Corrective Action Section B			Verification Section C	Approval Chief Eng	Approval QC Inspector
			Initial Chief Eng	Action Description Chief Eng	Sign & Date			

NOTE: Date & initial all entries

Picklist Print

Wednesday, April 13, 2011 11:05:22 AM

Work Order ID: 68432

Parent Item: D412-630-033

Parent Item Name: Heli Access Step LH Folding

Start Date: 4/13/2011 **Required Date:** 4/29/2011

Start Qty: 3.00 **Required Qty:** 3.00

AN3C21A BOLT	Purchased	No	110	Each	55.0000	2	6	11/04/26

Location		Loc Qty	Loc Code	
ST352		55		
	109148	35		6
	117366	20		

AN8C16 Bolt	Purchased	No	110	Each	65.0000	2	6	11/04/26

Location		Loc Qty	Loc Code	
ST345		65		
	105969	5		5
	106066	60		1

AN310C8 Nut	Purchased	No	110	Each	21.0000	2	6	11/04/26

Location		Loc Qty	Loc Code	
ST324		21		
	111819	21		6

MS24665-302 Cotter Pin	Purchased	No	110	Each	22.0000	6	18	11/04/26

Location		Loc Qty	Loc Code	
ST309		22		
	113644	22		6

Dart Aerospace Ltd

W/O:		WORK ORDER CHANGES					
DATE	STEP	PROCEDURE CHANGE	By	Date	Qty	Approval Chief Eng / Prod Mgr	Approval QC Inspector

Part No: _____ **PAR #:** _____ **Fault Category:** _____ **NCR:** Yes No **DQA:** _____ **Date:** _____

Resolution: _____ **Disposition:** _____ **QA: N/C Closed:** _____ **Date:** _____

NCR:		WORK ORDER NON-CONFORMANCE (NCR)						
DATE	STEP	Description of NC Section A	Corrective Action Section B			Verification Section C	Approval Chief Eng	Approval QC Inspector
			Initial Chief Eng	Action Description Chief Eng	Sign & Date			

NOTE: Date & initial all entries

H:\fFORMS\Quality Assurance\approved QA\NCRWO RevE

Picklist Print

Wednesday, April 13, 2011 11:05:22 AM

Work Order ID: 68432

Parent Item: D412-630-033

Parent Item Name: Heli Access Step LH Folding

Start Date: 4/13/2011 **Required Date:** 4/29/2011

Start Qty: 3.00 **Required Qty:** 3.00

NAS1515H3	Purchased	No	110	Each	97.0000	4	12	11/04/26
Washer								

Location	Loc Qty	Loc Code	
ST277	97		
115935	2		
116373	95		~~12~~ 18

NAS1515H5L	Purchased	No	110	Each	124.0000	4	12	11/04/26
WASHER								

Location	Loc Qty	Loc Code	
FG	40		
103691	40		
ST277	84		
111359	84		12

NAS1515H8	Purchased	No	110	Each	283.0000	4	12	11/04/26
Washer								

Location	Loc Qty	Loc Code	
ST278	283		
111275	83		12
111411	200		

Dart Aerospace Ltd

W/O:		WORK ORDER CHANGES					
DATE	STEP	PROCEDURE CHANGE	By	Date	Qty	Approval Chief Eng / Prod Mgr	Approval QC Inspector

Part No: _____ **PAR #:** _____ **Fault Category:** _____ **NCR:** Yes No **DQA:** _____ **Date:** _____

Resolution: _____ **Disposition:** _____ **QA: N/C Closed:** _____ **Date:** _____

NCR:		WORK ORDER NON-CONFORMANCE (NCR)						
DATE	STEP	Description of NC Section A	Corrective Action Section B			Verification Section C	Approval Chief Eng	Approval QC Inspector
			Initial Chief Eng	Action Description Chief Eng	Sign & Date			

NOTE: Date & initial all entries

H:\fFORMS\Quality Assurance\approved QA\NCRWO RevE

Picklist Print

Wednesday, April 13, 2011 11:05:23 AM

Work Order ID: 68432

Parent Item: D412-630-033

Parent Item Name: Heli Access Step LH Folding

Start Date: 4/13/2011 **Required Date:** 4/29/2011

Start Qty: 3.00 **Required Qty:** 3.00

MS21043-3	Purchased	No	110	Each	1,023.000	4	12	11/04/26
Nut								

Location	Loc Qty	Loc Code
FG	80	
103691	80	
FP-B	-5	
112314	-5	
ST301	948	
112314	948	12

MS24693-C280	Purchased	No	110	Each	39.0000	2	6	11/04/26
Screw								

Location	Loc Qty	Loc Code
ST310	30	
115594	30	4
ST318	9	
111279	9	2

D2806-1	Manufactured	No	130	Each	16.0000	2	6	11/4/26 32
Bushing								

8 +3

Location	Loc Qty	Loc Code
ST022	16	
~~46609~~	~~6~~	4
~~64074~~	~~10~~	2

Dart Aerospace Ltd

W/O:		WORK ORDER CHANGES					
DATE	STEP	PROCEDURE CHANGE	By	Date	Qty	Approval Chief Eng / Prod Mgr	Approval QC Inspector

Part No: _____ **PAR #:** _____ **Fault Category:** _____ **NCR:** Yes No **DQA:** _____ **Date:** _____

Resolution: _____ **Disposition:** _____ **QA: N/C Closed:** _____ **Date:** _____

NCR:		WORK ORDER NON-CONFORMANCE (NCR)						
DATE	STEP	Description of NC Section A	Corrective Action Section B			Verification Section C	Approval Chief Eng	Approval QC Inspector
			Initial Chief Eng	Action Description Chief Eng	Sign & Date			

NOTE: Date & initial all entries

H:\fFORMS\Quality Assurance\approved QA\NCRWO RevE

Picklist Print

Wednesday, April 13, 2011 11:05:23 AM

Work Order ID: 68432

Parent Item: D412-630-033

Parent Item Name: Heli Access Step LH Folding

Start Date: 4/13/2011 **Required Date:** 4/29/2011

Start Qty: 3.00 **Required Qty:** 3.00

D2806-3 Bushing	Manufactured	No	130	Each	17.0000	2	6	5

Location	Loc Qty	Loc Code
ST022	17	
46737	7	
64075	10	

D2810-5 Strut	Manufactured	No	130	Each	7.0000	1	3	5

Location	Loc Qty	Loc Code
ST265	7	
52034	1	
64081	6	

D3396-1 Spacer	Manufactured	No	130	Each	38.0000	2	6	11/4/28

Location	Loc Qty	Loc Code
ST052	38	
46748	38	

Dart Aerospace Ltd

W/O:		WORK ORDER CHANGES					
DATE	STEP	PROCEDURE CHANGE	By	Date	Qty	Approval Chief Eng / Prod Mgr	Approval QC Inspector

Part No: _____ **PAR #:** _____ **Fault Category:** _____ **NCR:** Yes No **DQA:** _____ **Date:** _____

Resolution: _____ **Disposition:** _____ **QA: N/C Closed:** _____ **Date:** _____

NCR:		WORK ORDER NON-CONFORMANCE (NCR)						
DATE	STEP	Description of NC Section A	Corrective Action Section B			Verification Section C	Approval Chief Eng	Approval QC Inspector
			Initial Chief Eng	Action Description Chief Eng	Sign & Date			

NOTE: Date & initial all entries

H:\fFORMS\Quality Assurance\approved QA\NCRWO RevE

Picklist Print

Wednesday, April 13, 2011 11:05:23 AM

Work Order ID: 68432

Parent Item: D412-630-033

Parent Item Name: Heli Access Step LH Folding

Start Date: 4/13/2011 **Required Date:** 4/29/2011

Start Qty: 3.00 **Required Qty:** 3.00

AN4C6A	Purchased	No	130	Each	345.0000	1	3	

Bolt

Location		Loc Qty	Loc Code
FG		4	
	103344	4	
ST306		50	
	117313	50	
ST356		291	
	115016	14	
	116003	127	
	116400	50	
	116704	100	

AN4C10A	Purchased	No	130	Each	84.0000	1	3	

Bolt

Location		Loc Qty	Loc Code
ST356		84	
	111295	4	
	112243	50	
	114523	30	

AN5C15A	Purchased	No	130	Each	43.0000	2	6	

Bolt

Location		Loc Qty	Loc Code
ST339		43	
	111819	43	

Dart Aerospace Ltd

W/O:		WORK ORDER CHANGES					
DATE	STEP	PROCEDURE CHANGE	By	Date	Qty	Approval Chief Eng / Prod Mgr	Approval QC Inspector

Part No: _____ **PAR #:** _____ **Fault Category:** _____ **NCR:** Yes No **DQA:** _____ **Date:** _____

Resolution: _____ **Disposition:** _____ **QA: N/C Closed:** _____ **Date:** _____

NCR:		WORK ORDER NON-CONFORMANCE (NCR)						
DATE	STEP	Description of NC Section A	Corrective Action Section B			Verification Section C	Approval Chief Eng	Approval QC Inspector
			Initial Chief Eng	Action Description Chief Eng	Sign & Date			

NOTE: Date & initial all entries

H:\fFORMS\Quality Assurance\approved QA\NCRWO RevE

Picklist Print

Wednesday, April 13, 2011 11:05:23 AM

Work Order ID: 68432

Parent Item: D412-630-033

Parent Item Name: Heli Access Step LH Folding

Start Date: 4/13/2011 **Required Date:** 4/29/2011

Start Qty: 3.00 **Required Qty:** 3.00

AN44C7A Eyebolt	Purchased	No	130	Each	80.0000	1	3	

Location	Loc Qty	Loc Code
ST362	80	
109013	40	
111308	40	

AN4C15A Bolt	Purchased	No	130	Each	54.0000	2	6	

Location	Loc Qty	Loc Code
ST358	54	
115457	8	
115936	46	

NAS1515H4 Washer	Purchased	No	130	Each	97.0000	7	21	

Location	Loc Qty	Loc Code
ST277	97	
111525	47	
116169	50	

NAS1515H5 Washer	Purchased	No	130	Each	178.0000	7	21	11/4/28 30

Location	Loc Qty	Loc Code
FG	40	
103286	20	
103691	20	
ST277	138	
109430	138	

Dart Aerospace Ltd

W/O:		WORK ORDER CHANGES					
DATE	STEP	PROCEDURE CHANGE	By	Date	Qty	Approval Chief Eng / Prod Mgr	Approval QC Inspector

Part No: _____ **PAR #:** _____ **Fault Category:** _____ **NCR:** Yes No **DQA:** _____ **Date:** _____

Resolution: _____ **Disposition:** _____ **QA: N/C Closed:** _____ **Date:** _____

NCR:		WORK ORDER NON-CONFORMANCE (NCR)						
DATE	STEP	Description of NC Section A	Corrective Action Section B			Verification Section C	Approval Chief Eng	Approval QC Inspector
			Initial Chief Eng	Action Description Chief Eng	Sign & Date			

NOTE: Date & initial all entries

H:\fFORMS\Quality Assurance\approved QA\NCRWO RevE

Picklist Print

Wednesday, April 13, 2011 11:05:23 AM

Work Order ID: 68432

Parent Item: D412-630-033

Parent Item Name: Heli Access Step LH Folding

Start Date: 4/13/2011 **Required Date:** 4/29/2011

Start Qty: 3.00 **Required Qty:** 3.00

MS21043-4 Nut	Purchased	No	130	Each	639.0000	4	12	

Location		Loc Qty	Loc Code	
FG		40		
	104603	40		
ST301		599		
	114523	3		
	116188	296		12
	116549	300		

MS21043-5 Nut	Purchased	No	130	Each	561.0000	3	9	4/4/ 28 32

Location		Loc Qty	Loc Code	
FG		20		
	101418	20		
ST301		541		
	112314	441		9
	116548	100		

Dart Aerospace Ltd

W/O:		WORK ORDER CHANGES					
DATE	STEP	PROCEDURE CHANGE	By	Date	Qty	Approval Chief Eng / Prod Mgr	Approval QC Inspector

Part No: _____ **PAR #:** _____ **Fault Category:** _____ **NCR:** Yes No **DQA:** _____ **Date:** _____

Resolution: _____ **Disposition:** _____ **QA: N/C Closed:** _____ **Date:** _____

NCR:		WORK ORDER NON-CONFORMANCE (NCR)						
DATE	STEP	Description of NC Section A	Corrective Action Section B			Verification Section C	Approval Chief Eng	Approval QC Inspector
			Initial Chief Eng	Action Description Chief Eng	Sign & Date			

NOTE: Date & initial all entries

H:\fFORMS\Quality Assurance\approved QA\NCRWO RevE

D412-630-033/-034 *Heli-Access-Step*™ Installation

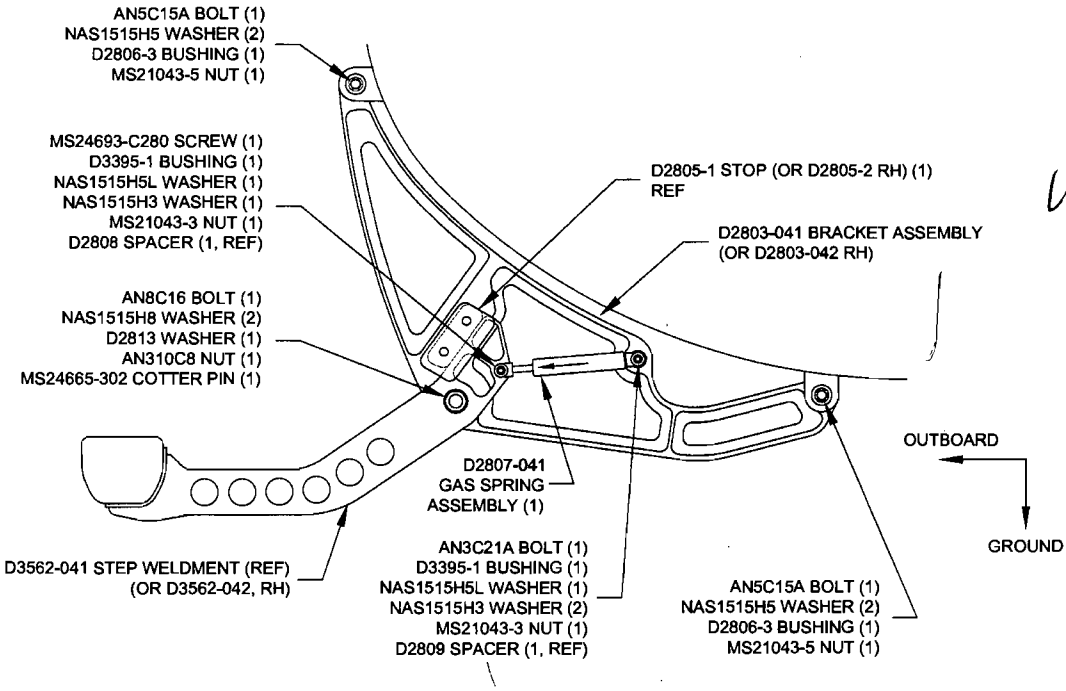

w/o 68432

FIGURE 25-13: STA 84.29 for D412-630-033/-034 *Heli-Access-Step*™ Installation
(View rotated 90° CW)

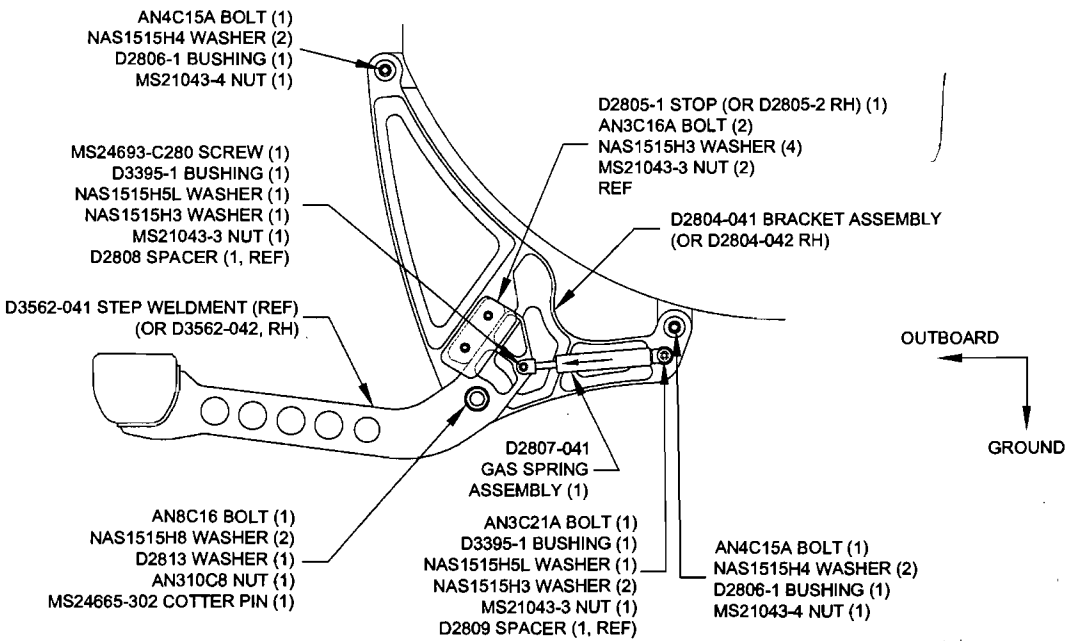

FIGURE 25-14: STA 155.06 for D412-630-033/-034 *Heli-Access-Step*™ Installation
(View rotated 90° CW)

• COPYRIGHT © 2005 BY DART AEROSPACE LTD •
THIS DOCUMENT IS PRIVATE AND CONFIDENTIAL AND IS SUPPLIED ON THE EXPRESS CONDITION THAT IT IS NOT TO BE USED FOR ANY PURPOSE OR COPIED OR COMMUNICATED TO ANY OTHER PERSON WITHOUT WRITTEN PERMISSION FROM DART AEROSPACE LTD.

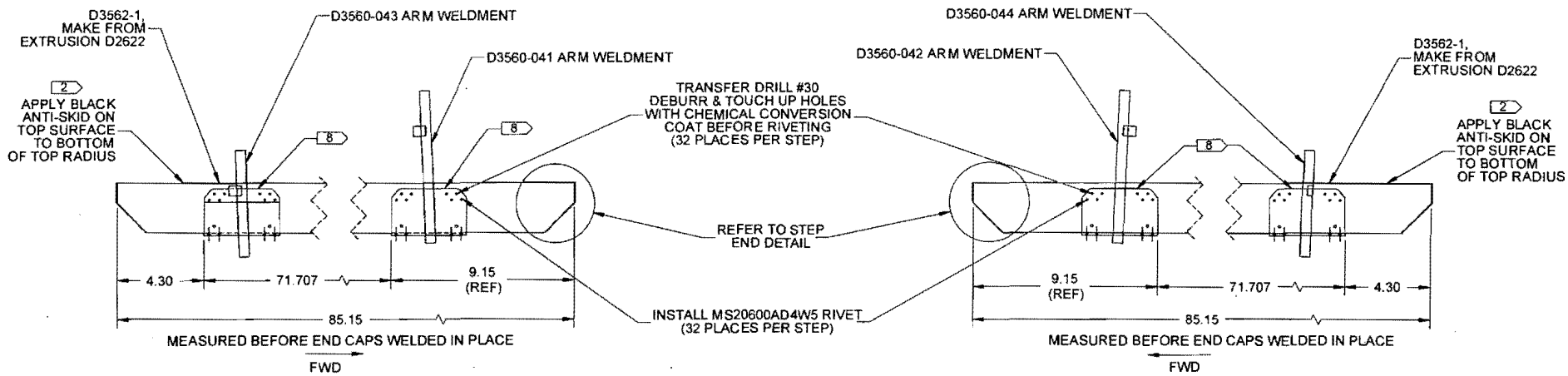

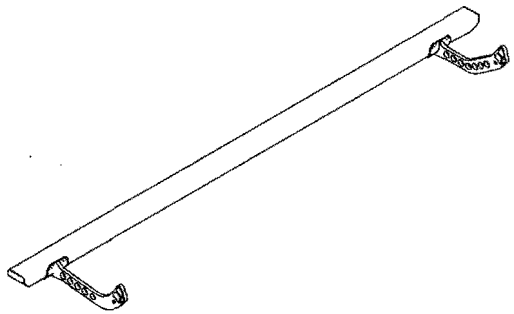

D3562-041 LH STEP ASSEMBLY

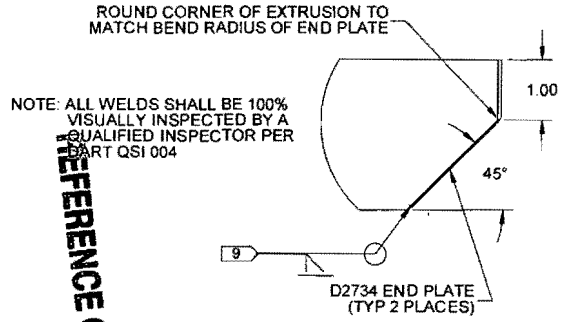

NOTE: ALL WELDS SHALL BE 100% VISUALLY INSPECTED BY A QUALIFIED INSPECTOR PER DART QSI 004

TYPICAL STEP END DETAIL
SCALE 1:2

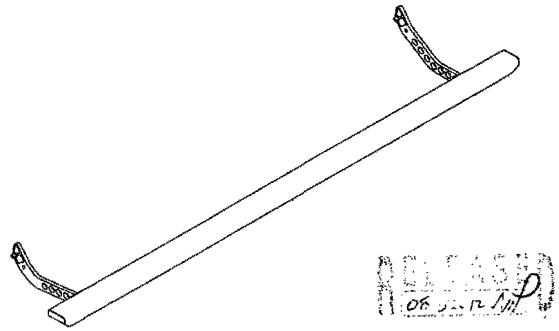

D3562-042 RH STEP ASSEMBLY

REFERENCE ONLY

NOTES:
1) MATERIAL: N/A
2) FINISH:
   i) CHEMICAL CONVERSION COAT STEP EXTRUSION PER DART QSI 005 4.1 BEFORE ASSEMBLY
   ii) POWDER COAT ASSEMBLY GLOSS WHITE (4.3.5.1) OR GREY SANDTEX (4.3.5.6) OR BLACK SANDTEX (4.3.5.7) OR GREEN SANDTEX (4.3.5.8) PER DART QSI 005 4.3
   iii) BLACK ANTI-SKID PAINT PER DART QSI 005 4.4
3) TOLERANCES: PER DART QSI 018 UNLESS OTHERWISE NOTED
4) UNITS: INCHES UNLESS OTHERWISE NOTED
5) BREAK SHARP EDGES: 0.005 TO 0.010 MAX
6) IDENTIFICATION: NONE
7) WEIGHT: 8.79 lbs
8) INSTALL ARM WELDMENTS WITH A LAYER OF MAGNOBOND 6398 BETWEEN THE ARM WELDMENT AND STEP EXTRUSION. FILL ANY TOOLING HOLES WITH MAGNOBOND 6398. CLEAN OFF EXCESS BEFORE POWDER COATING.
9) WELDING: PER DART QSI 004

QTY -041	QTY -042	P/N	DESCRIPTION
X		D3562-041	LH STEP ASSEMBLY
	X	D3562-042	RH STEP ASSEMBLY
1		D3560-041	ARM WELDMENT
	1	D3560-042	ARM WELDMENT
1		D3560-043	ARM WELDMENT
	1	D3560-044	ARM WELDMENT
32	32	MS20600AD4W5	RIVET
2	2	D2734	END PLATE

E

REV.	DESCRIPTION	BY	DATE
E	ADD QTY (2) TO D2734 END PLATE ON D3562-042	PH	08.01.11
D	REMOVE D2808 SPACER NOTE; REDRAWN IN SOLIDWORKS	DC	07.11.16
C	NOW MAGNOBOND, ADD D2808, REMOVE 4 RIVETS	CP	07.06.19
B	ARMS NOW RIVETED TO STEP	CP	07.01.15
A	NEW ISSUE	CP	06.09.26

DESIGN		**DART AEROSPACE LTD** HAWKESBURY, ONTARIO, CANADA
DRAWN		DRAWING NO. D3562 — REV. E — SHEET 1 OF 1
CHECKED		TITLE: STEP ASSEMBLY — SCALE 1:5
MFG. APPR.		
APPROVED		
DE APPR.		
DATE	08.01.11	

COPYRIGHT © 2006 BY DART AEROSPACE LTD
THIS DOCUMENT IS PRIVATE AND CONFIDENTIAL AND IS SUPPLIED ON THE EXPRESS CONDITION THAT IT IS NOT TO BE USED FOR ANY PURPOSE OR COPIED OR COMMUNICATED TO ANY OTHER PERSON WITHOUT WRITTEN PERMISSION FROM DART AEROSPACE LTD

Qty -033	Qty -034	Qty -243	Qty -244	Part Number	Description
X				**D412-630-033**	***HELI-ACCESS-STEP*™ LH (FOLDING)**
	X			**D412-630-034**	***HELI-ACCESS-STEP*™ RH (FOLDING)**
1		X		**D412-630-243**	**STEP ASSEMBLY LH**
	1		X	**D412-630-244**	**STEP ASSEMBLY RH**
		1	1	D2012-107	CLEVIS
		1		D2803-041	STA 84 BRACKET ASSEMBLY LH
			1	D2803-042	STA 84 BRACKET ASSEMBLY RH
		1		D2804-041	STA 155 BRACKET ASSEMBLY LH
			1	D2804-042	STA 155 BRACKET ASSEMBLY RH
2	2			D2806-1	BUSHING
2	2			D2806-3	BUSHING
		2	2	D2807-041	GAS SPRING ASSEMBLY (WAS D2807)
1	1			D2810-5	STRUT
		2	2	D2813	WASHER
		1		D3562-041	STEP WELDMENT LH
			1	D3562-042	STEP WELDMENT RH
		4	4	D3395-1	BUSHING
2	2			D3396-1	SPACER
		2	2	AN3C21A	BOLT
1	1			AN4C6A	BOLT
1	1			AN4C10A	BOLT
2	2			AN4C15A	BOLT
1	1			AN44-C7A	EYEBOLT
2	2			AN5C15A	BOLT
		2	2	AN8C16	BOLT
		2	2	AN310C8	NUT
		2	2	MS24665-302	COTTER PIN (OR AN380C3-4)
		6	6	NAS1515H3	WASHER
7	7			NAS1515H4	WASHER
7	7			NAS1515H5	WASHER
		4	4	NAS1515H5L	WASHER
		4	4	NAS1515H8	WASHER
		4	4	MS21043-3	NUT
4	4			MS21043-4	NUT
3	3			MS21043-5	NUT
		2	2	MS24693-C280	SCREW (OR MS24694-C565)

• COPYRIGHT © 1996 BY DART AEROSPACE LTD. •
THIS DOCUMENT IS PRIVATE AND CONFIDENTIAL AND IS SUPPLIED ON THE EXPRESS CONDITION THAT IT IS NOT TO BE USED FOR ANY PURPOSE OR COPIED OR COMMUNICATED TO ANY OTHER PERSON WITHOUT WRITTEN PERMISSION FROM DART AEROSPACE LTD.